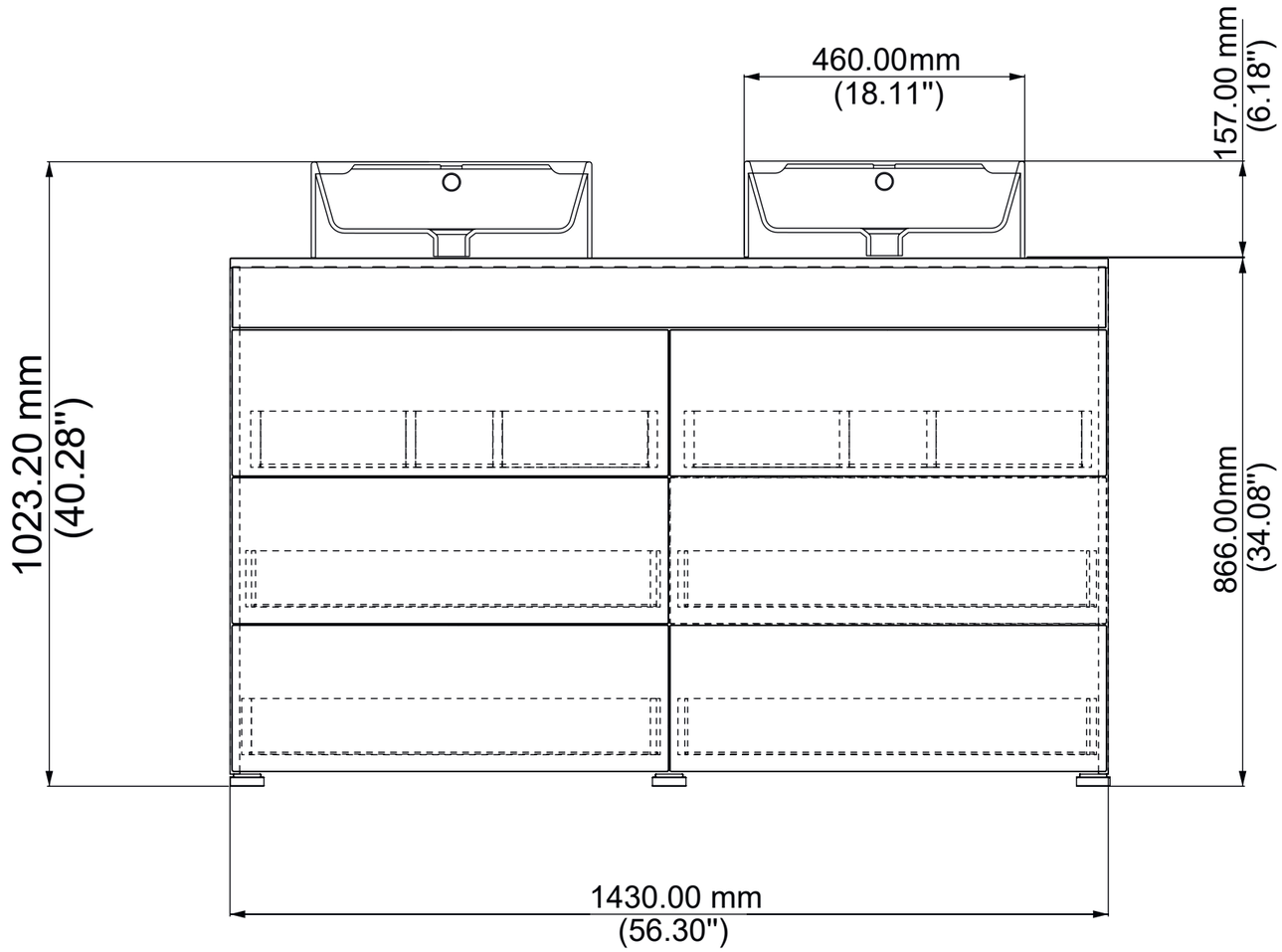
460.00mm
(18.11")
157.00 mm
(6.18")
1023.20 mm
(40.28")
866.00mm
(34.08")
1430.00 mm
(56.30")

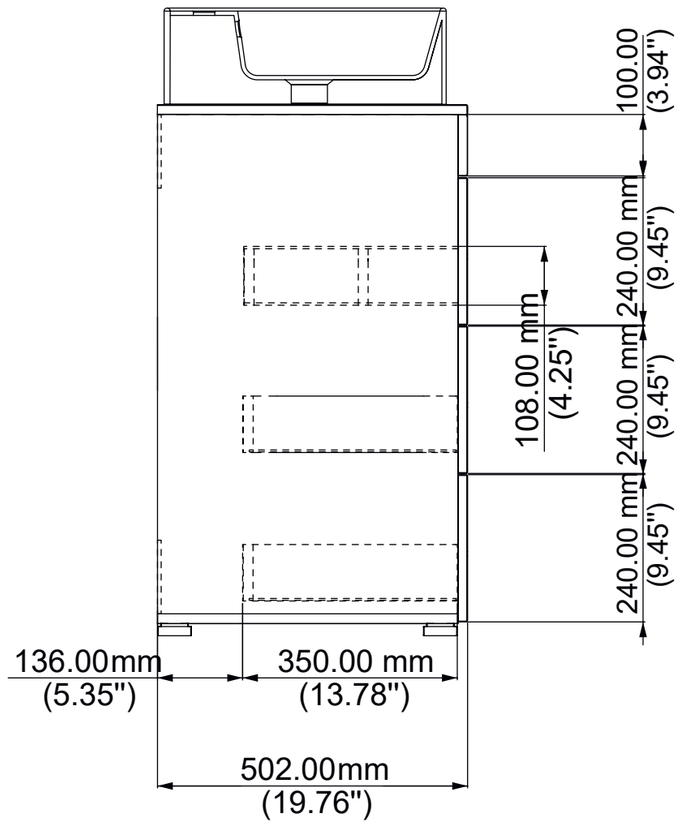
100.00
(3.94")
240.00 mm
(9.45")
108.00 mm
(4.25")
240.00 mm
(9.45")
240.00 mm
(9.45")
136.00mm
(5.35")
350.00 mm
(13.78")
502.00mm
(19.76")

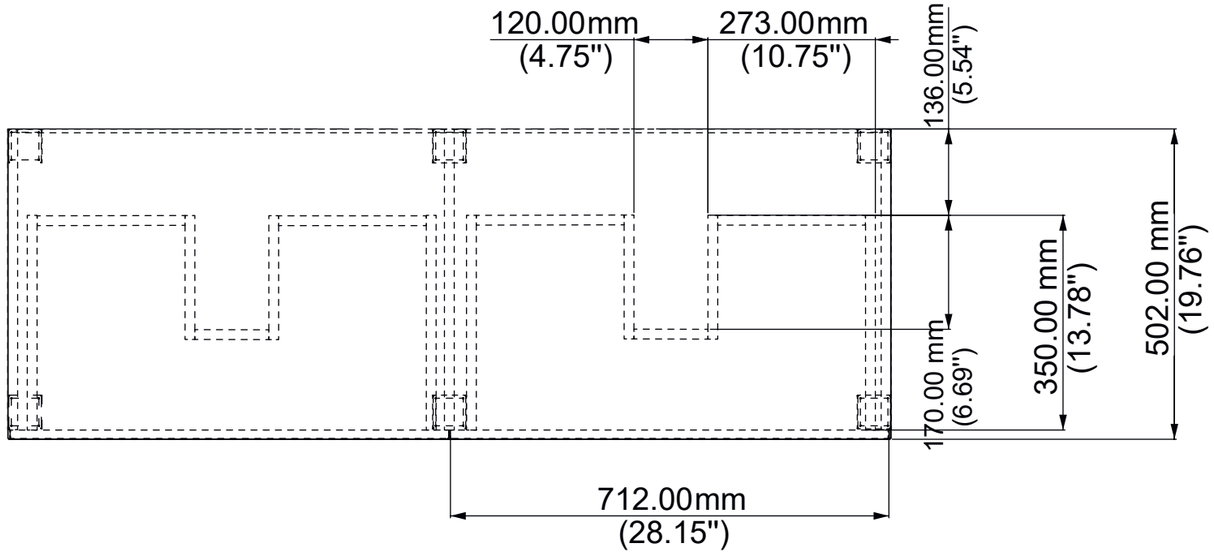
120.00mm
(4.75")
273.00mm
(10.75")
136.00mm
(5.54")
350.00 mm
(13.78")
502.00 mm
(19.76")
170.00 mm
(6.69")
712.00mm
(28.15")