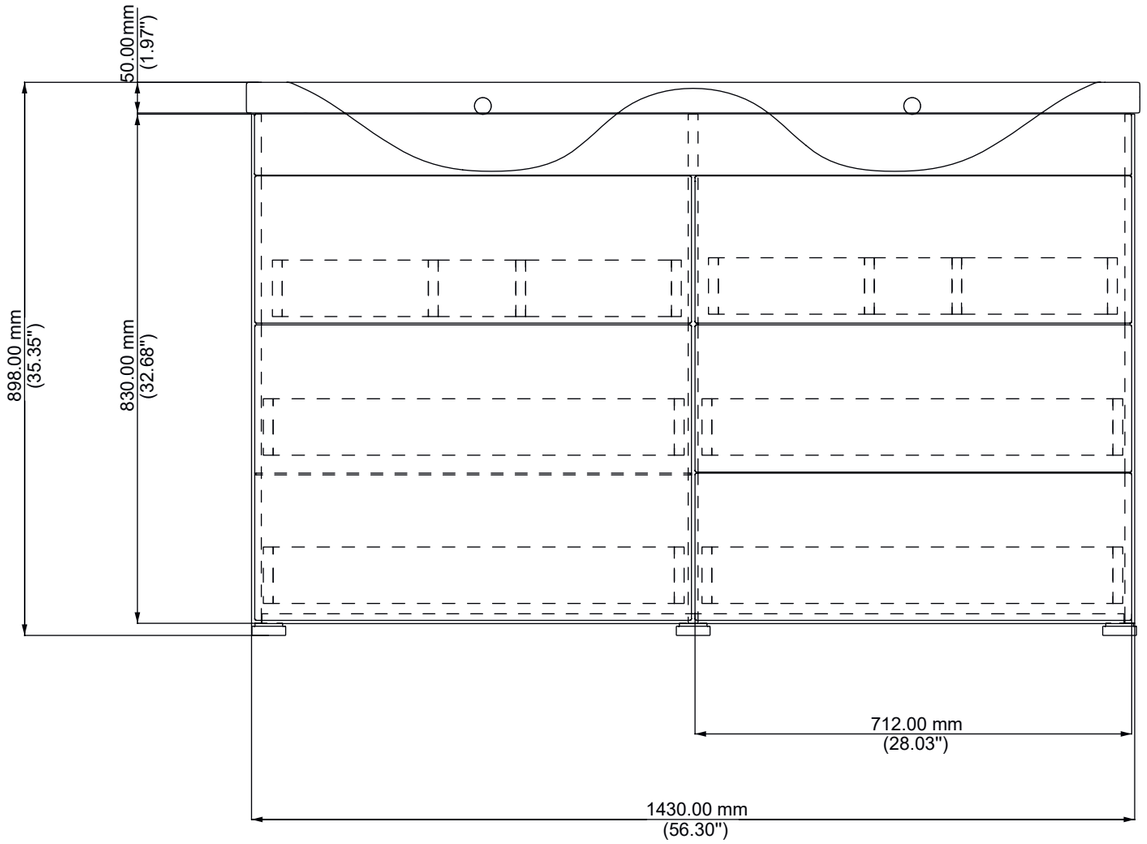
50.00mm
(1.97")
898.00 mm
(35.35")
830.00 mm
(32.68")
712.00 mm
(28.03")
1430.00 mm
(56.30")

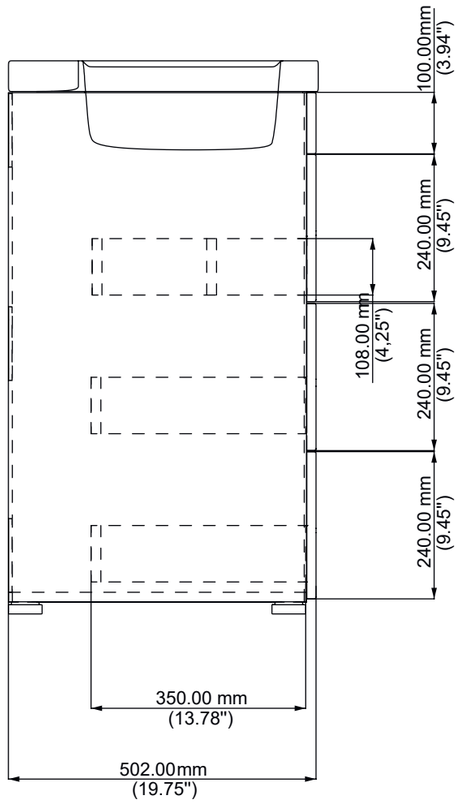
100.00mm
(3.94")
240.00 mm
(9.45")
108.00 mm
(4.25")
240.00 mm
(9.45")
240.00 mm
(9.45")
350.00 mm
(13.78")
502.00mm
(19.75")

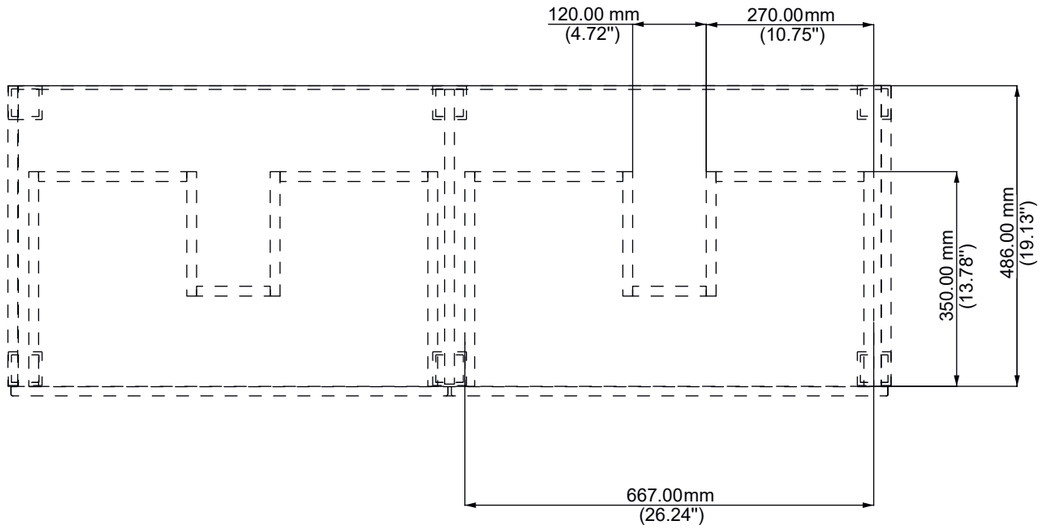
120.00 mm
(4.72")
270.00mm
(10.75")
350.00 mm
(13.78")
486.00 mm
(19.13")
667.00mm
(26.24")